Stored positrons for antihydrogen production

C.M. Surko [a], R.G. Greaves [a] and M. Charlton [b]

[a] *Physics Department, University of California, San Diego, La Jolla, CA 92093-0319, USA*
[b] *Department of Physics and Astronomy, University College London, Gower Street, London WC1E 6BT, UK*

The production of antihydrogen is examined in the light of recent experimental results on a technique for the efficient accumulation, manipulation, and storage of positrons. From these data, we argue that this high-efficiency positron trapping technique could be adapted for the production of antihydrogen and would offer significant advantages over other positron trapping techniques currently being proposed for this purpose.

The production of atomic antimatter has been a long-standing research objective for physicists from many different research disciplines, mainly due to its fundamental interest [1]. Recent advances in the accumulation and cooling of antiprotons [2–4] and positrons [5–7] in Penning traps now make the production of low-temperature antihydrogen experimentally feasible. The remaining hurdles are the combination of these constituents, and trapping the resulting cold antihydrogen atoms for experimentation (see, e.g., ref. [8]). The most promising of the various schemes proposed for combining the two species are the collision of positronium atoms with stored antiprotons [9], and the three-body recombination of antiprotons and positrons in nested Penning traps [10,11]. Recently, Walz et al. [12] demonstrated the simultaneous confinement of protons and electrons in a combined Penning–Paul trap, which could also be applied to antihydrogen production using three-body recombination of antiprotons and positrons. Very recently atoms of antihydrogen at high energy have been created by injecting a high-energy beam of antiprotons into a gas cell [13]. For spectroscopy and other precision applications, however, trapped low-energy antiatoms are required, so it is important to develop efficient methods to produce low-energy antihydrogen, such as those described here.

At present, the world's only source of low-energy antiprotons is the Low Energy Antiproton Ring (LEAR) and associated apparatus at CERN. With dedicated use of this facility, about 10^7 antiprotons could be trapped and cooled per hour [2,4], which is adequate for the first production of antihydrogen at low temperatures. LEAR was shut down at the end of 1996, but low-energy antiproton production is expected to

© J.C. Baltzer AG, Science Publishers

resume in 1999. We are nonetheless faced with the prospect of reduced fluxes of low-energy antiprotons, or much lower capture efficiencies of the higher-energy antiprotons available at other facilities. This makes it timely to explore efficient methods for low-energy positron accumulation so that the available antiprotons can be most effectively utilized.

To create antihydrogen, it is necessary to have long lifetimes for the trapped antiprotons, which has been achieved in a sealed cryogenic trap [14]. This may have led to a perception of a very strict vacuum requirement for positron accumulation, which in turn has favored an intrinsically inefficient positron accumulation scheme with present trapping rates of less than one thousand positrons per hour [7]. In this paper, we examine new and existing data and conclude that the vacuum requirement for antihydrogen production is much less stringent than has been suggested. We argue that this should enable an alternative positron accumulation method with demonstrated high trapping efficiency to be employed for antihydrogen production.

A number of methods have been described for accumulating positrons in Penning traps. These include collisions with buffer gas molecules [15] or trapped ions [16], applying a voltage ramp to the positron source [17], trapping positrons from pulsed sources by fast switching of confining potentials [18,19], and trapping by exploiting the magnetron drift of injected positrons [20,21].

Two of these methods have been demonstrated experimentally for the long term accumulation of positrons, namely the buffer gas method [5,6,22], and the magnetron drift technique [7,21]. The latter technique has the advantage of not requiring a buffer gas, but it has a very low trapping efficiency of 0.02 e^+ $mCi^{-1}\,s^{-1}$. This yields positron loading rates of only 6.5×10^2 positrons per hour from a 10 mCi source. While this is not a limitation for precision measurements on single trapped positrons [21,23], it presents a serious drawback for the production of antihydrogen, where large numbers of positrons are required.

The present state of the art in positron trapping using the buffer gas scheme is presented in fig. 1(a), which shows the accumulation of $\sim 1 \times 10^8$ positrons in a three minute cycle using a 70 mCi source. This corresponds to a trapping efficiency of 55 000 e^+ $mCi^{-1}\,s^{-1}$, which is six orders of magnitude more efficient than the magnetron drift technique. This trapping rate corresponds to capturing about 30% of the incident slow positron beam from the moderator, and leads to a loading rate of $\sim 2.4 \times 10^6$ $e^+\,s^{-1}$ from a 70 mCi source. Figure 1(b) shows the storage of positrons when the buffer gas (and consequently the trapping) has been shut off after the positrons were loaded. As described below, with some modifications, this technique could be conveniently adapted for antihydrogen production.

Also shown in fig. 1 is the storage of the same number of electrons under similar conditions. The fact that the positron lifetime does not scale with the gas pressure, and is less than the electron lifetime (determined by cross-field transport) is a consequence of the wide variation in annihilation cross-sections for different gases. These cross-sections, represented by the dimensionless parameter Z_{eff}, have been studied extensively for atoms and molecules at low energies, both theoretically and experi-

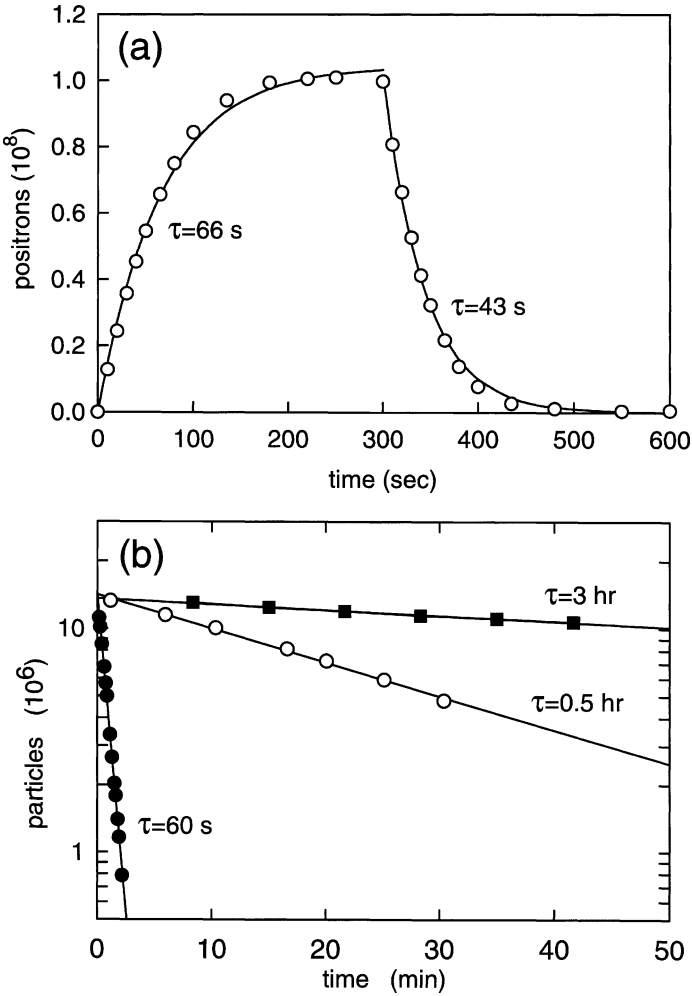

Fig. 1. (a) Accumulation of positrons from a 70 mCi ^{22}Na source ($p \simeq 1 \times 10^{-6}$ Torr). The positron beam is switched off at t = 300 s. (b) Storage of: (•) positrons at $p \simeq 6 \times 10^{-7}$ Torr; (○) positrons at $p \simeq 5 \times 10^{-10}$ Torr; and (■) electrons at $p \simeq 5 \times 10^{-10}$ Torr.

mentally [24–26]. For the simple molecules such as H_2 and He, which are the major constituents of the residual gas in well-baked vacuum systems, Z_{eff} is of the order of 10, but it can be as high as 10^6 or greater for large organic molecules [26]. Our present vacuum system is sealed by rubber O-rings, and the hydrocarbon contaminants have an estimated $Z_{\text{eff}} \sim 1000$.

Because of the very high trapping rates that have been obtained using the buffer gas technique, it is attractive to consider applying it for antihydrogen production. The success of such a scheme would depend on isolating the positron trap from the antiproton trap during the time that positrons are accumulated. One method of accomplishing this is to use a separate UHV stage, as illustrated in fig. 2. After the

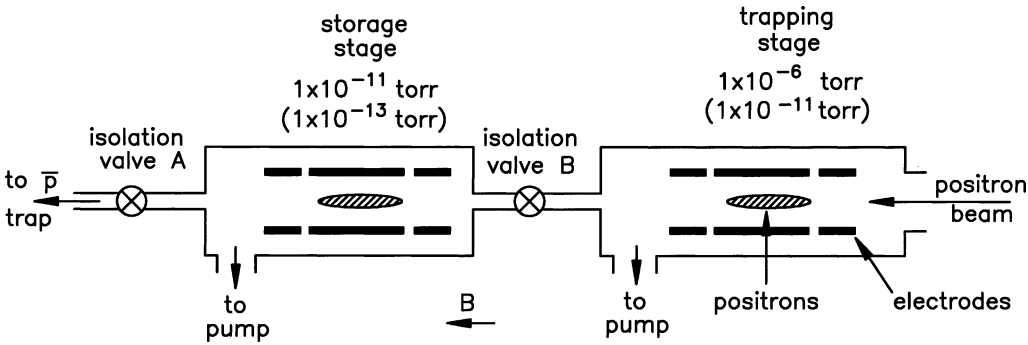

Fig. 2. Schematic diagram of the existing positron trap (right of valve 'B') and the proposed isolated UHV stage (left of valve 'B') designed for long-term storage. In an actual experiment, the positron trap would have three stages, as described in ref. [22]. The pressures in parentheses are those estimated to be obtainable using electrodes at cryogenic temperatures.

positrons have been trapped using the buffer gas, they would be transferred to the UHV trap, which would be isolated by a gate valve, denoted 'B' in fig. 2. This would be accomplished using the following sequence: once a sufficient number of positrons has been accumulated in the trapping stage, the buffer gas feed would be switched off, and the trap pumped to a base pressure of 5×10^{-10} Torr, which typically takes less than 30 s, as shown in fig. 3. Gate valve 'B' would then be opened for the brief time ($\sim$ 1 s) required to transfer the positrons to the storage trap.

The system would have metal gaskets and be bakable with a base pressure of $\sim 10^{-11}$ Torr, comprised mainly of He, H_2, and Ne ($Z_{\mathrm{eff}} \sim 10$), so that the positron annihilation time would be greater than 50 days. The loss mechanism would be cross-field transport, and the confinement time would be like that of electrons under similar conditions, i.e., $\sim$ 3 h.

The loading rates can be estimated as follows. With a three-minute trapping cycle and allowing one minute for pumping out the buffer gas between cycles, positrons could be loaded into the storage trap at a rate of 2×10^9 e^+ per hour. Furthermore, by means of relatively modest improvements to the trap using existing technology, it should be possible to increase the number of positrons by a factor of 5 to 5×10^8 e^+ per cycle. These improvements include increasing the source strength to 150 mCi, which is conveniently available commercially, and modest improvements to the source geometry, magnetic field, and vacuum system. With these modifications, positron loading rates of $\sim 1 \times 10^{10}$ positrons per hour should be achievable. With such high loading rates, and a confinement time > 3 h, the limiting factor in the number of positrons that can be accumulated is expected to be the space-charge limit of the potential well. In a trap of the size presently used for antiproton storage, the limiting total number of positrons would be $\sim 1 \times 10^{10}$ for a 5 mm radius charge cloud in a $\sim$1 kV potential well.

Once a sufficient number of positrons has been accumulated in the storage section, the gate valve to the antiproton trap (denoted 'A' in fig. 2) can be opened and the

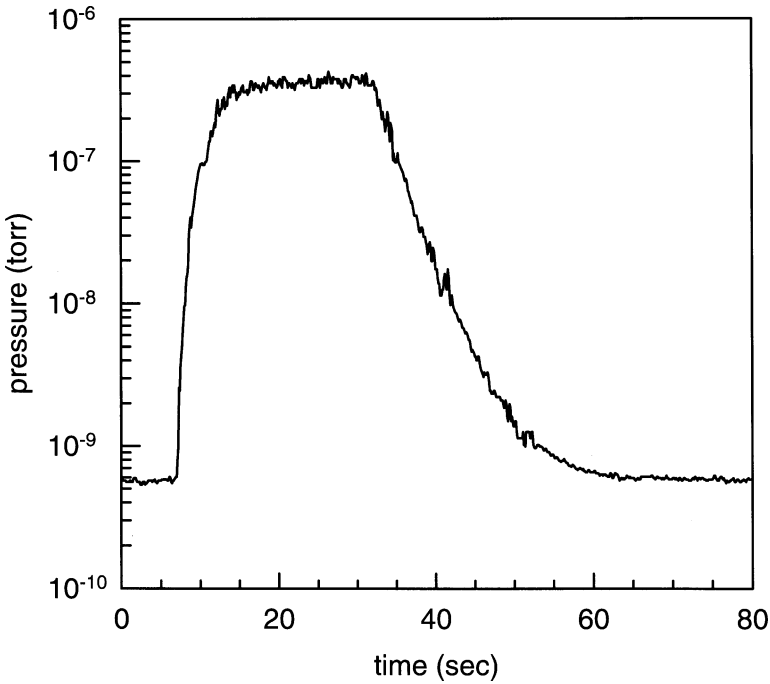

Fig. 3. Gas pressure in the third stage of the positron trap during a pumpout cycle. The buffer gas feed is switched on at t = 7 s and switched off at t = 33 s.

positrons transferred. Data from an antiproton capture experiment indicate that the lifetime of antiprotons in cryogenic systems partially exposed to room temperature surfaces, is in excess of 1000 s [2].

Thus, the exposure to the UHV positron storage trap should pose no problem. We note further that a recent study [3] has found evidence for anomalously long lifetimes of antiprotons trapped in such an environment when the antiprotons were cooled to low temperature. These lifetimes were not expected on the basis of the estimated gas pressure and the theoretical cross sections [27].

After transfer to the antiproton trap, the perpendicular energy distribution of the positrons will cool to the temperature of the electrodes ($\sim$ 20 K) by cyclotron radiation, and the parallel energy distribution will also cool, by means of equilibration with the perpendicular energy. These cooling and equilibration processes have been studied in strongly magnetized electron plasmas in a parameter regime similar to the one that would apply to the positron storage trap envisaged here [28]. For example, at $B = 60$ kG and a density of 8×10^8 cm^{-3}, the cyclotron cooling time is $\sim$ 0.24 s, while the equilibration time varies between 1×10^{-3} s and 1×10^{-5} s over a temperature range from 20 to 10^4 K. This cooling is sufficiently rapid, so that the fact that the positrons are trapped at room temperature is not a drawback, even if significant heating occurs in the transfer of positrons between stages.

A simpler configuration than that shown in fig. 2 can also be envisaged in which

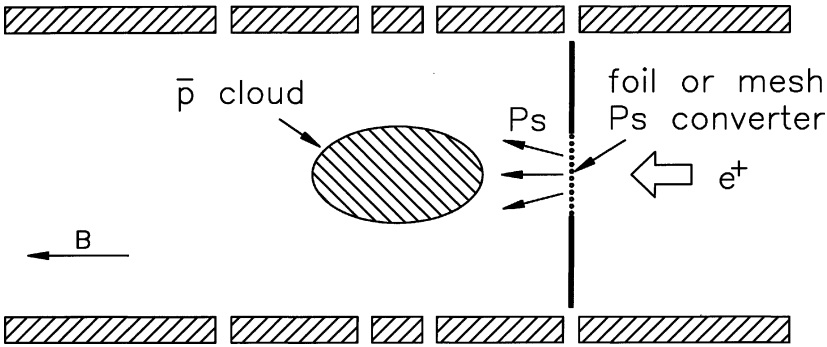

Fig. 4. Possible geometry for antihydrogen production using a transmission-type positronium converter.

the positrons would be transferred to the antiproton trap directly from the trapping stage via gate valve 'B' in fig. 2, after the buffer gas had been pumped out. In this case, the number of positrons available in each cycle would be limited to a pulse of at least 5×10^8 every three minutes. With a trapping stage sealed by metal gaskets, the antiproton trap would never be exposed to a pressure greater than 10^{-11} Torr.

In the antiproton–positronium scheme for producing antihydrogen, a positronium converter (which could be one of a variety of solid materials that produce low-energy positronium atoms when bombarded with positrons) would be located close to a cloud of around 10^7 antiprotons in a cylindrical Penning trap [29]. One possible interaction geometry is shown in fig. 4. Positrons enter the Penning trap from the right and form positronium on a transmission-type converter [30] which is appropriately shaped and biased to mimic a trap equipotential so as not to disturb the antiproton cloud [31]. Using a pulse of $\sim 10^{10}$ positrons accumulated in the storage stage of the trap shown in fig. 2, it should be possible to produce a burst of positronium atoms in the vacuum, which will pass through the antiproton cloud, producing antihydrogen atoms via charge-exchange collisions. The number of resulting antihydrogen atoms is difficult to estimate at present, since it will depend on the details of the geometry of the positronium converter and its relation to the antiprotons. However, Charlton [29] has estimated that if the antiproton cloud has a diameter of 4 mm and is located 8 mm from the converter, then 100 antihydrogen atoms could be produced per day with a continuous positron beam of 5×10^6 $e^+ s^{-1}$. In the present scheme, this translates into 2–3 antihydrogen atoms per pulse of 10^{10} positrons. The pions produced by these antiatoms when they annihilate on the walls of the trap should be easily distinguishable from background events, since they will occur within a well-defined time window of about 50 μs following the positron pulse.

For antihydrogen production using either the nested-well or the positronium atom beam technique, the availability of such large numbers of positrons as described here holds several advantages over the magnetron-drift technique, which can trap only 3×10^4 positrons in a 60-h cycle. For antihydrogen formed in nested wells by the

three-body recombination technique, this large number of positrons should also permit evaporative cooling, so that positrons which are significantly colder than the antiprotons could be obtained.

In summary, we conclude that the use of a buffer gas in positron trapping poses no significant impediment to efficient antihydrogen production. The existing positron trapping techniques employing a buffer gas are now capable of producing suitable accumulations of positrons to produce measurable amounts of antihydrogen.

Acknowledgements

The work at the University of California, San Diego, is supported by the Office of Naval Research. The work at University College London has been supported by the EPSRC (UK). We wish to thank the members of the PS200 collaboration for useful discussions, particularly X. Feng, M.H. Holzscheiter, J.P. Merrison and J. Rochet.

References

[1] M. Charlton et al., Phys. Rep. 241 (1994) 65.
[2] M.H. Holzscheiter, Phys. Scr. T 5 (1995) 326.
[3] M.H. Holzscheiter et al., Phys. Lett. A 214 (1996) 279.
[4] G. Gabrielse et al., Hyp. Interact. 81 (1993) 5.
[5] C.M. Surko, M. Leventhal and A. Passner, Phys. Rev. Lett. 62 (1989) 901.
[6] R.G. Greaves, M.D. Tinkle and C.M. Surko, Phys. Plasmas 1 (1994) 1439.
[7] L. Haarsma, K. Abdullah and G. Gabrielse, Phys. Rev. Lett. 75 (1995) 806.
[8] T.W. Hansch and C. Zimmermann, Hyp. Interact. 76 (1993) 47.
[9] B.I. Deutch et al., Hyp. Interact. 76 (1993) 153.
[10] M.E. Glinsky and T.M. O'Neil, Phys. Fluids B 3 (1991) 1279.
[11] D.S. Hall and G. Gabrielse, Phys. Rev. Lett. 77 (1996) 1962;
W. Quint, R. Kaiser, D. Hall and G. Gabrielse, Hyp. Interact. 76 (1993) 181.
[12] J. Walz et al., Phys. Rev. Lett. 75 (1995) 3257.
[13] G. Baur et al., Phys. Lett. B 368 (1996) 251.
[14] G. Gabrielse et al., Phys. Rev. Lett. 65 (1990) 1317.
[15] C.M. Surko, A. Passner, M. Leventhal and F.J. Wysocki, Phys. Rev. Lett. 61 (1988) 1831.
[16] D.J. Wineland, C.S. Weimer and J.J. Bollinger, Hyp. Interact. 76 (1993) 115.
[17] B. Ghaffari, R.S. Conti and T.D. Steiger, AIP Conf. Proc. 303 (1994) 487.
[18] T.E. Cowan et al., Hyp. Interact. 76 (1993) 135.
[19] A. Mohri et al., in: *Elementary Processes in Dense Plasmas*, eds. S. Ichimaru and S. Ogata (Addison-Wesley, New York, 1995) pp. 477–486.
[20] H.G. Dehmelt, P.B. Schwinberg and R.S. Van Dyck, Jr., Int. J. Mass Spectr. Ion Phys. 26 (1978) 107.
[21] P.B. Schwinberg, R.S. Van Dyck, Jr., and H.G. Dehmelt, Phys. Lett. A 81 (1981) 119.
[22] T.J. Murphy and C.M. Surko, Phys. Rev. A 46 (1992) 5696.
[23] H. Dehmelt, Rev. Mod. Phys. 62 (1990) 525.
[24] M. Charlton, Rep. Prog. Phys. 48 (1985) 737.
[25] D.M. Schrader and R.E. Svetic, Can. J. Phys. 60 (1982) 517.
[26] K. Iwata et al., Phys. Rev. A 51 (1995) 473.

[27] L. Bracci, G. Fiorentini and O. Pitzurra, Phys. Lett. B 85 (1979) 280.
[28] B.R. Beck, J. Fajans and J.H. Malmberg, Phys. Rev. Lett. 68 (1992) 317.
[29] M. Charlton, Can. J. Phys. 74 (1996) 483.
[30] M.R. Poulsen et al., J. Physics: Cond. Matter 3 (1991) 2849.
[31] J.P. Merrison, private communication, 1995.